One-Piece, End Drain Tub/Shower & Shower Installations

TS-6030 (all versions) TSF-6030 (all versions) TSF-6032 (all versions) TS-6032 (all versions)
TST-6032 (all versions) TS-6034 (all versions) TS-6036 (all versions) TST-6036 (all versions)
TST-6042 (all versions) TS-7236 (all versions) SHS-6030R/L (all versions)

These guidelines are recommended for the proper installation of Oasis products. A careful review of these procedures (and any referenced publications) before starting is important in avoiding an improper assembly and/or installation.

NOTE: All illustrations in this publication are typical, and may appear different than the actual product. Optional items may also be shown that were not ordered on the product being installed.

ON HYDROTHERAPY EQUIPPED MODELS, A SEPARATE QR CODE IS AVAILABLE ON THE ATTACHED PRODUCT TAG FOR THE HYDROTHERAPY SYSTEM. READ THEM BEFORE INSTALLING UNIT!

Special Notes to Installer

◆ LIFT UNIT ONLY BY THE OUTSIDE SHELL. DO NOT HANDLE BY SYSTEM PIPING OR COMPONENTS!

◆ It is the sole responsibility of the installer to determine the requirements necessary for compliance with all installation code requirements!

◆ All published product dimensions are for reference only. Any critical dimensions required for installation should be taken directly from the product being installed!

◆ Any independent modifications made to the product (or any options / accessories supplied) beyond those required for normal installation can void all warranties! (Refer to warranties for further information)

INSPECTION GUIDELINES

Carefully check the unit upon receipt. Notify your supplier immediately if any questions or problems are encountered during this process.

DO NOT INSTALL PRODUCT WITHOUT FIRST ADDRESSING QUESTIONS WHICH ARISE DURING THE INSPECTION!

Basic Module Check

- Check unit drain position for match to bathroom drain location.
- Check unit for surface damage.
- Check unit color for coordination to other bathroom fixtures.

Hydrotherapy System Check

Assembly and operational instructions are included in a separate publication for all hydrotherapy equipped models.

- Check for proper trim color and system options.

INSTALLATION SITE FRAMING

The recommended framing and dimensional requirements shown are for a traditional application and may vary, based on site requirements.

NOTE: A pump access MUST BE PROVIDED for all hydrotherapy equipped units. Additional access may be required to comply with local codes.

The dimensions shown in the dimensional diagrams (1a, b & c) are from the surfaces where the unit will be attached. This surface can be bare studding, dry wall or other suitable under layment material. It is important that the floor and all framing be square and level. Framing must be done using accepted materials and construction techniques in accordance with all applicable codes for the site.

NOTE: Any pre-constructed wall(s) may require modification or additional framing to allow for factory applied pipes and/or fittings which may protrude from the body of the unit.

INSTALLATION PROCEDURE

NOTE: 'Wet-set' is not required to support the floor under an Oasis product due to the encapsulated balsa wood construction.

With the unit positioned in the framed area, several details must be checked prior to securing the unit. (Illust. 2 & 3)

- Confirm the apron/dam is resting flush on the floor.
- Confirm drain position.
- Confirm the unit is level along each side and across each end.
- Confirm the unit is square in the framed installation area.
- Confirm both inside front corners are plumb at each end. (This is critical for proper door installation)

NOTE: The use of a shims behind the nailing flange may be required to ensure the unit remains square.

After the unit is confirmed level and square within the framing, drill a 1/8" hole through the nailing flange at each vertical framing member and every 8-inches along the vertical flanges. Secure the unit in place across the back wall first, followed by the ends and then along the front vertical flanges, using 1-1/4" long flat head fasteners. Continually check to make sure the unit remains plumb within the alcove as it is being secured. (Illust. 4 & 5)

NOTE: Usage of a thin shield to protect the unit surface while fastening the unit to the framing is recommended.

WARNING!
THE INSIDE UNIT SURFACE SHOULD BE CLEAR OF ALL LOOSE DEBRIS AND THE SURFACE PROTECTED BEFORE STEPPING INSIDE.

Water Supply and Drain Connections

Refer to, and follow, the assembly and installation instructions provided with the supply valves and drain system. Carefully check all connections for leaks.

Finishing Guidelines

Filler strips or filler material may be required over the framing to ensure the under layment mounts flush over the flanges. A water resistant under layment is recommended surrounding the unit. Stop the under layment 1/16 to 1/8-inch from the unit surface, and fill the space with a continuous bead of water resistant sealant. (Illust. 6)

NOTE: Oasis recommends a high quality silicone based sealant with a mold and mildew resistant content.

Use care when fastening the under layment near the unit surface to avoid damage. Seal the under layment seams and edges, as required, and install the finish material to specifications.

UNIT SURFACE CARE

WARNING!
NEVER USE ABRASIVE MATERIALS, OR ABRASIVE CLEANERS ON THE UNIT SURFACE!

EXTREME CAUTION is urged regarding the use of any cleaner, acid or solvent on the unit surface.
READ AND FOLLOW PACKAGE INSTRUCTIONS FOR ALL PURCHASED CLEANING PRODUCTS!

Through routine use, the unit surface can collect residues from soap, bath additives and natural body oils. Additional deposits can also collect from minerals or particles found in the water. After each use, wipe the excess water from the unit.This practice will reduce the buildup of deposits and help maintain the natural unit lustre.

Following a thorough surface cleaning, an application of quality automotive wax will help reduce major accumulations. The actual schedule for cleaning and waxing will depend on unit usage and water quality.

WARNING!
NEVER APPLY WAX TO THE UNIT FLOOR!

◆ Routine Cleaning: Mild, non-abrasive cleaner specifically formulated for gelcoat and acrylic surfaces recommended. (Rinse surface thoroughly)

◆ Heavy Soap Deposits: Liquid ammonia household cleaner, applied full strength. (Rinse surface thoroughly)

◆ Stubborn Stains: Liquid household cleaner or hydrogen peroxide applied full strength. Place a saturated clean rag directly on stain and let stand several hours. (Rinse surface thoroughly)

◆ Hard Water Scales: Liquid scale remover or white vinegar, applied full strength. (Rinse surface thoroughly)

◆ Mold/Mildew: Liquid mildew remover or baking soda and water paste. (Apply paste and allow to fizz several minutes.) (Rinse surface thoroughly)

◆ Construction Adhesive: Soften adhesive with a hand held hair dryer and peel off adhesive. (Caution is advised when using any electrical device near water.)

For adhesive residue, apply rubbing alcohol or nail polish remover, full strength. (Rinse surface thoroughly)

WARNING!
BATH MATS AND OTHER ITEMS HELD IN PLACE USING SUCTIONS MUST BE REMOVED FROM THE UNIT SURFACE AFTER EACH USE.

OVER AN EXTENDED PERIOD, FAILURE TO REMOVE SUCTION ATTACHED ITEMS WILL DAMAGE THE UNIT SURFACE.

Illustration 1a - End Drain, Unit Dimension & Alcove Framing Guidelines (dimensional tolerance + / -1/8”)

TS-6030R ABF

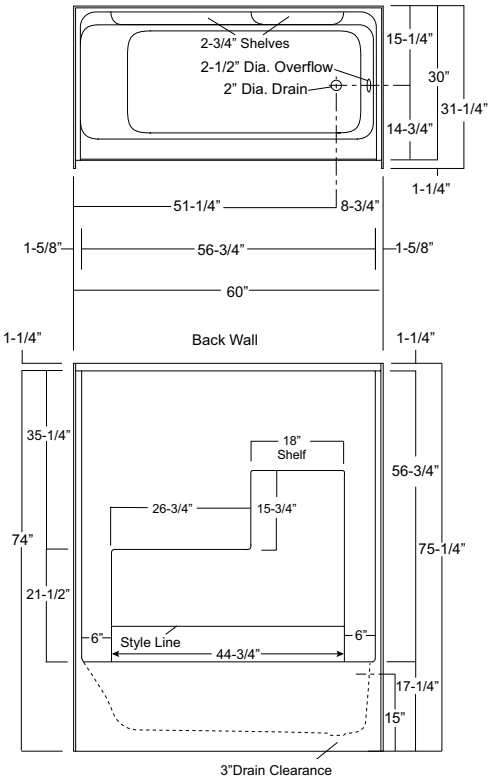

TSF-6030R ABF

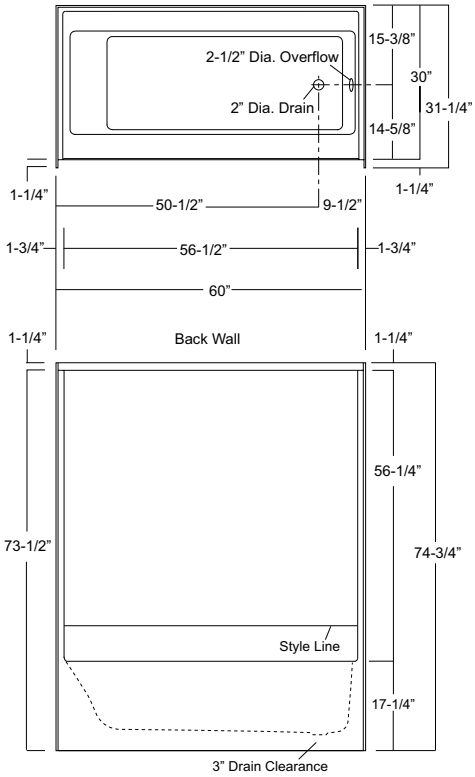

TSF-6032L ABF

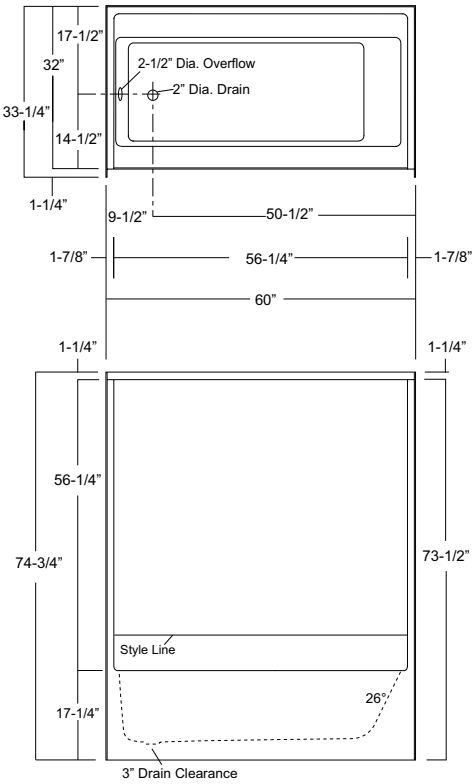

Illustration 1b - End Drain, Unit Dimension & Alcove Framing Guidelines (dimensional tolerance + / -1/8”)

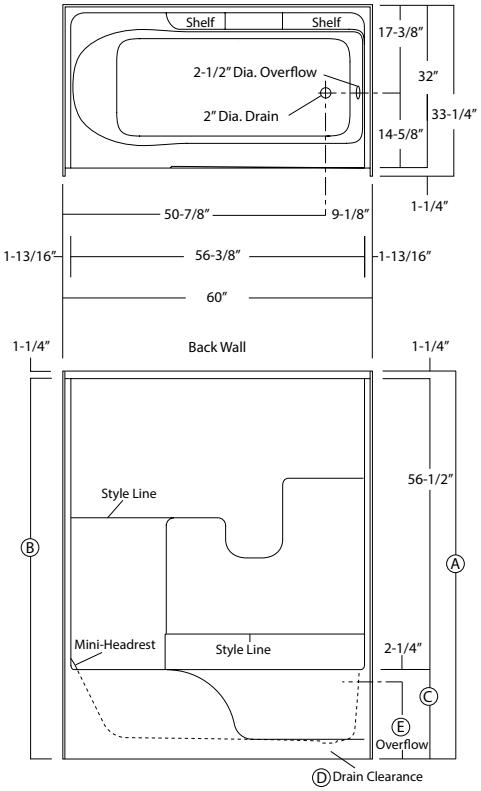

TS-6032R (illustrated)

	Std Unit	ABF Unit
A	73-3/4”	75”
B	72-1/2”	73-3/4”
C	16”	17-1/4”
D	1-3/4”	3”
E	13-3/4”	15”
F	-	-

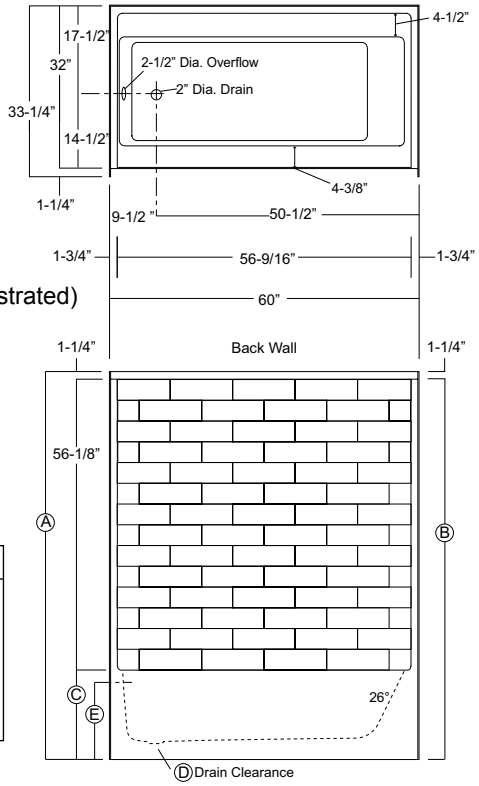

TST-6032L (illustrated)

TST-6032 / TST-6036

	Std Unit	ABF Unit
A	73-3/8”	74-5/8”
B	72-1/8”	73-3/8”
C	16”	17-1/4”
D	1-3/4”	3”
E	13-3/4”	15”
F	-	-

TS-6034
TS-6036

	Std Unit	ABF Unit
A	79-1/4”	81”
B	78”	79-3/4”
C	18-1/4”	20”
D	1-3/4”	3-1/2”
E	16”	17-3/4”
F	-	-

TST-6036L (illustrated)

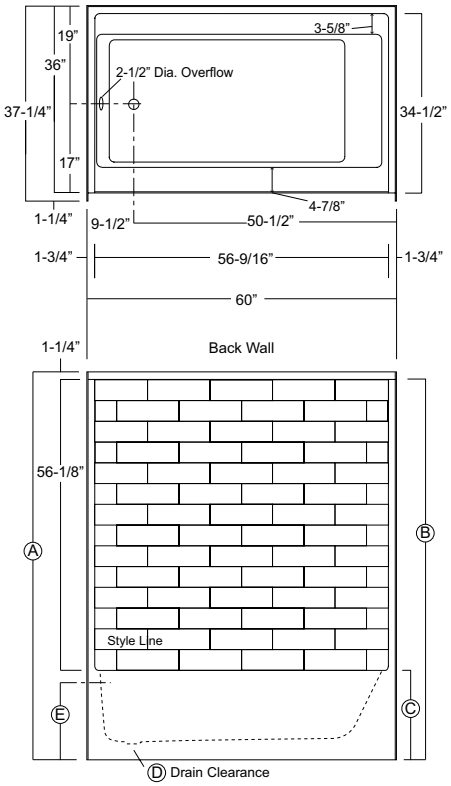

TS-6034R (illustrated)

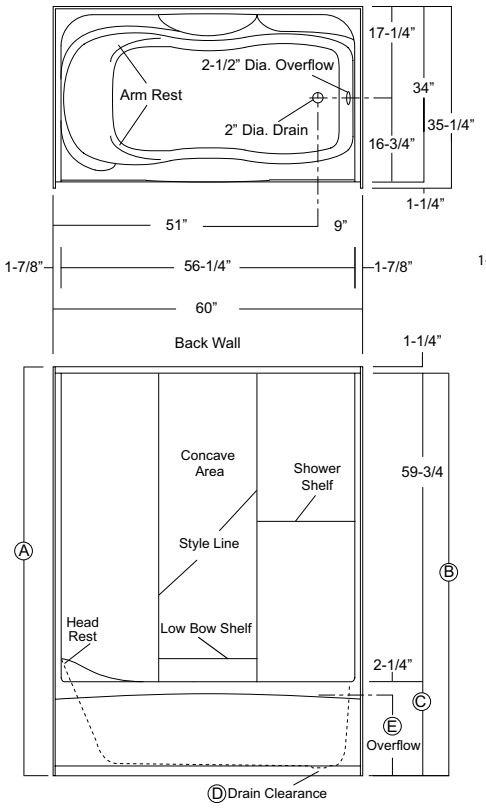

TS-6036R (illustrated)

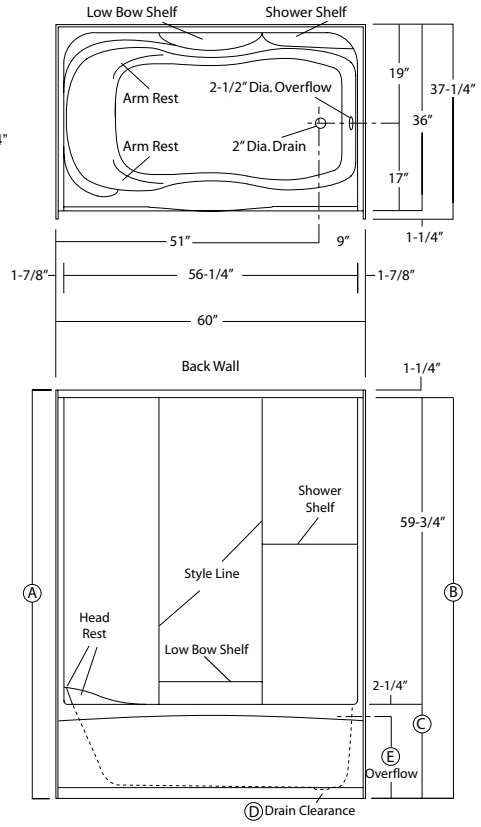

Illustration 1c - End Drain, Unit Dimension & Alcove Framing Guidelines (dimensional tolerance + / -1/8”)

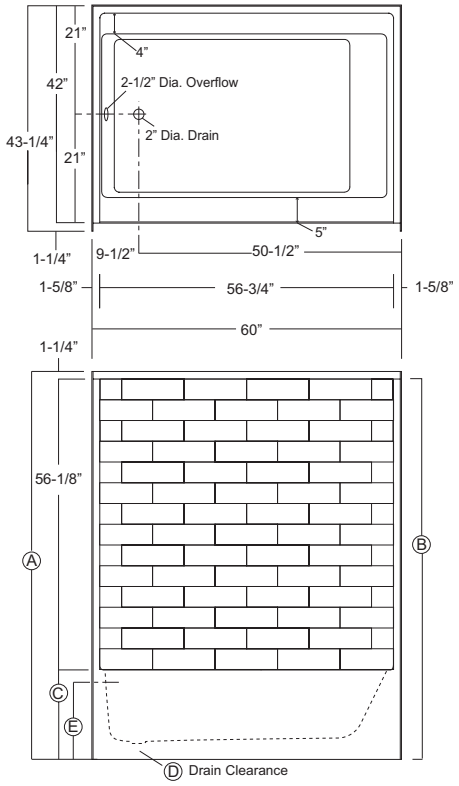

TST-6042L

	Std Unit	ABF Unit
A	73-3/8”	74-5/8”
B	72-1/8”	3-3/8”
C	16”	17-1/4”
D	1-3/4”	3”
E	13-3/4”	15”
F	-	-

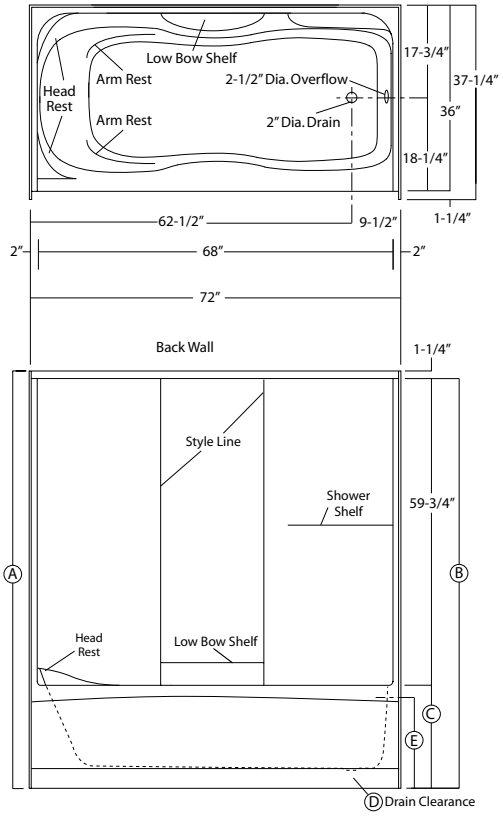

TS-7236R

	Std Unit	ABF Unit
A	79-1/4”	81”
B	78”	79-3/4”
C	18-1/4”	20”
D	1-3/4”	3-1/2”
E	16”	17-3/4”
F	-	-

SHS-6030R ABF (illustrated)

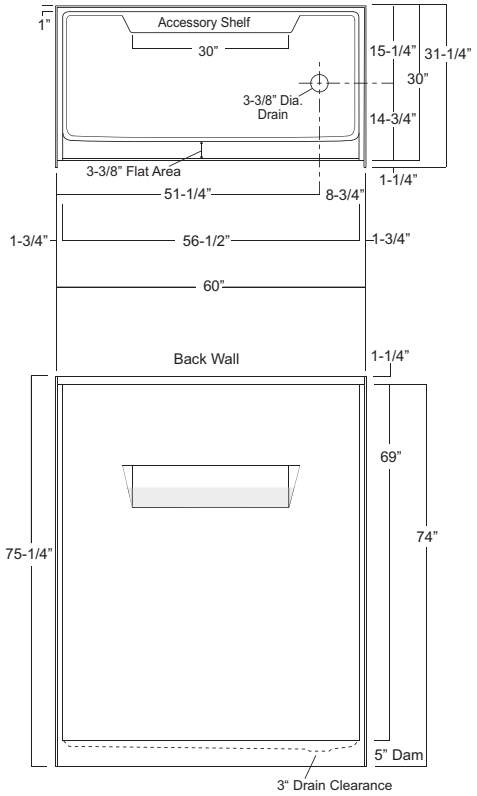

End Drain, Unit Dimension & Alcove Framing Guidelines (dimensional tolerance + / -1/8”)

NOTE: Left End Drain Installation Illustrated.

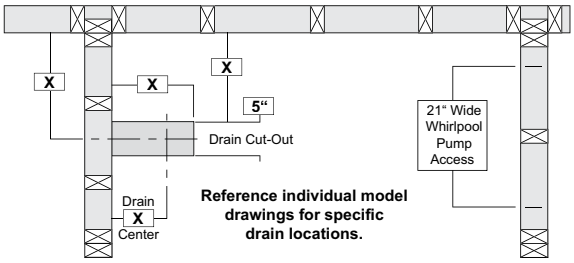

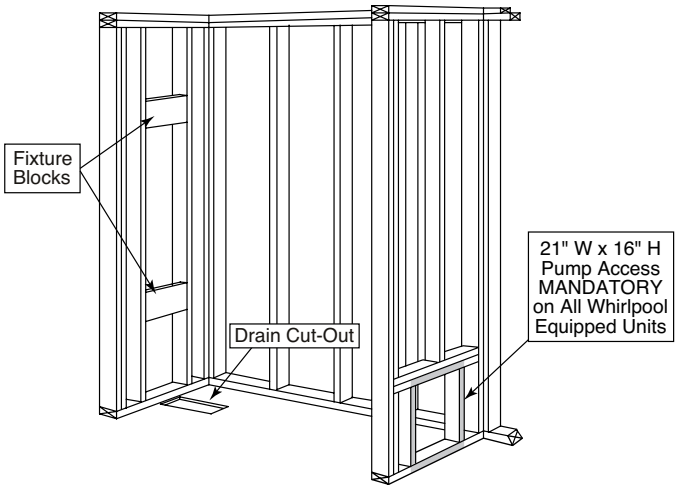

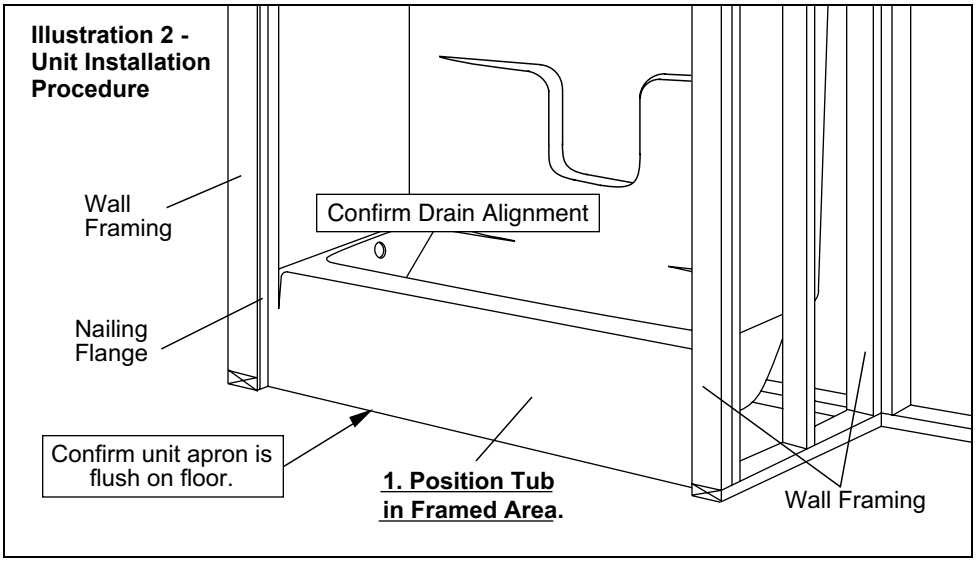
Illustration 2 - Unit Installation Procedure
Wall Framing
Confirm Drain Alignment
Nailing Flange
Confirm unit apron is flush on floor.
1. Position Tub in Framed Area.
Wall Framing

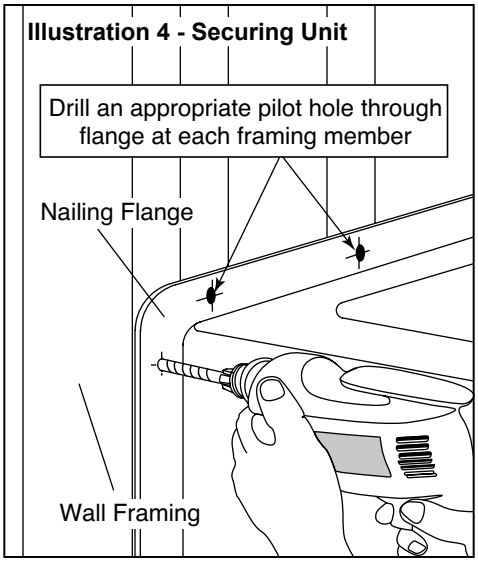
Illustration 4 - Securing Unit
Drill an appropriate pilot hole through flange at each framing member
Nailing Flange
Wall Framing

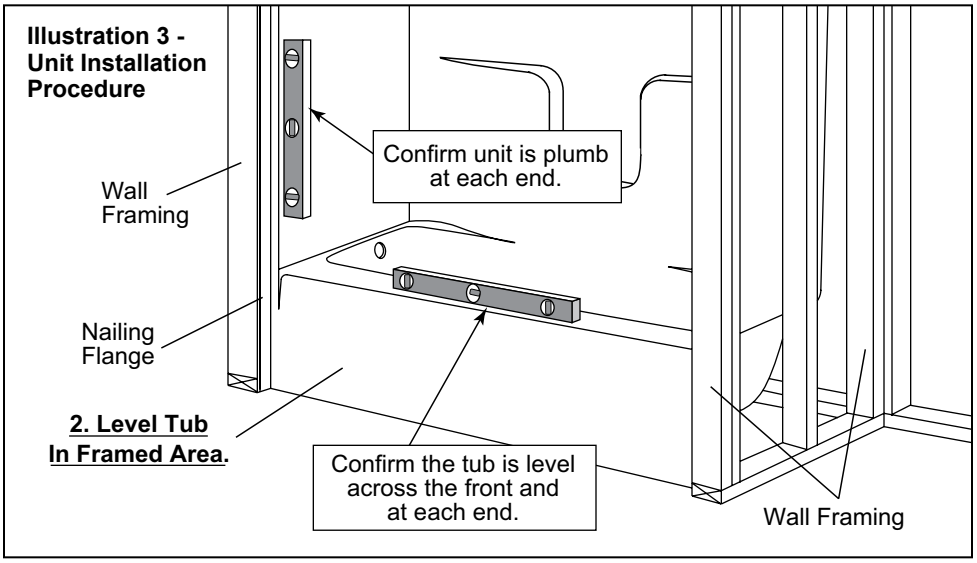
Illustration 3 - Unit Installation Procedure
Confirm unit is plumb at each end.
Wall Framing
Nailing Flange
2. Level Tub In Framed Area.
Confirm the tub is level across the front and at each end.
Wall Framing

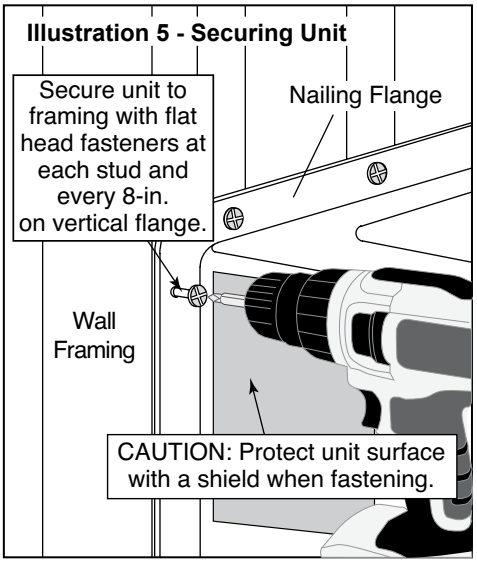
Illustration 5 - Securing Unit
Secure unit to framing with flat head fasteners at each stud and every 8-in. on vertical flange.
Nailing Flange
Wall Framing
CAUTION: Protect unit surface with a shield when fastening.

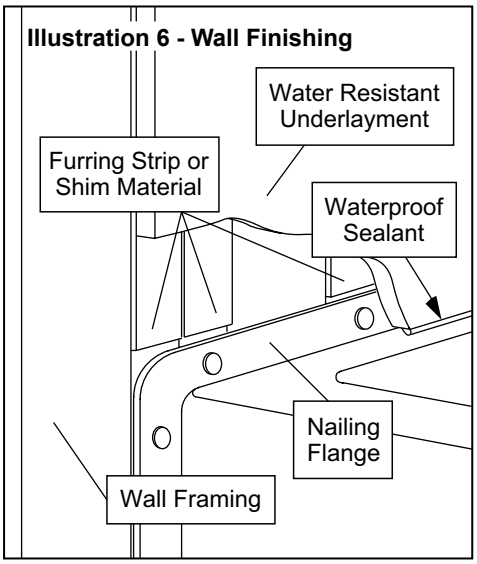
Illustration 6 - Wall Finishing
Water Resistant Underlayment
Furring Strip or Shim Material
Waterproof Sealant
Nailing Flange
Wall Framing

Oasis Lifestyle Product Assurance Program

Bathing and Shower Unit Structure & Surface Finish Limited Warranty

Oasis Lifestyle provides a performance assurance program for unit structural integrity and surface finish covering a five (5) year period from the date-of-purchase on GELCOAT, and covering a ten (10) year period from the date-of-purchase on VACUUM FORMED ACRYLIC product, for the original purchaser and subsequent consumer. This Oasis limited warranty program addresses specific defects in the product, and the workmanship associated with the manufacture of the Oasis bathing and shower product. The specific defects covered must result in a significantly altered appearance and/or affect the intended performance standards for the product under normal residential use.

Hydro-Massage Systems (water recirculation & air), Option & Accessories Limited Warranty

Oasis Lifestyle provides a performance assurance program for their hydro-massage systems (herein called 'system'), and their options and accessories covering a two (2) year period from the date-of-purchase for the original purchaser and subsequent consumer. This Oasis limited warranty program addresses specific defects in the system components, and the workmanship associated with the assembly of the systems, along with offered options and accessories installed by Oasis, on an Oasis unit. The specific defects covered must result in a significantly altered appearance and/or affect the intended performance standards for the system, the option and/or the accessory.

During the coverage period, Oasis will, at its discretion (following a verification by an authorized Oasis representative), either provide service or supply a replacement product without charge, but excluding any cost associated with the transportation, removal of and/or reinstallation of the unit (module). Failure to allow requested inspection by an authorized Oasis representative, and/or failure to provide adequate accessibility for an authorized inspection, and/or service performed prior to documented authorization from Oasis Lifestyle, LLC., may delay service, and/or possibly terminate any warranty coverage, and remove any liability to Oasis Lifestyle, LLC.

This 'Product Assurance Program' does not cover service resulting the following:

a) Improper field installation of the product, system, option, accessory, and/or surrounding structure modifications, and/or utility service connections beyond the recommendations supplied by Oasis and within the scope of applicable codes and ordinances; or
b) Carelessness, damage, abuse, misuse, negligence, improper care, fire, flood, or acts of God; or
c) Non-conforming use, including any use beyond those intended for the product, system, option and/or accessory, including failure to follow the Prescribed Care and Maintenance Instructions; or
d) Any unauthorized alterations or modifications to the product, system, option, accessory and/or the individual parts or components supplied by Oasis.
e) Any surface and/or component staining, discoloration, component failure and/or build-up caused as a result of water chemistry or water quality at the site.
f) Service resulting from normal use and wear for the product, system, option and/or accessory.

Repair or the supplying of replacement product and/or components, under this limited warranty program, shall be the exclusive remedy. Oasis Lifestyle, LLC., shall not be liable for any incidental or consequential damages, including damages to the building / structure, the contents, the occupants, or breach of any expressed or implied warranties. Oasis Lifestyle, LLC., does not recognize, nor authorizes any party to provide implied or written warranties regarding a product, system, option and/or accessories fitness for a particular purpose, nor modify the terms of the limited warranty beyond those stated.

Some states do not allow the exclusion or limitation of incidental or consequential damages, or allow limitations on the duration of any implied warranty. Therefore, the above exclusions and/or limitations may not apply.

THIS WARRANTY PROVIDES SPECIFIC LEGAL RIGHTS, WHICH CAN VARY FROM STATE-TO-STATE.

Home Innovation LAB CERTIFIED™

The manufacturer represents that the product to which this label is affixed (a) duplicates samples independently tested by Home Innovations Research Labs and certified to conform to the requirements of HUD UM Bulletin 73a and the appropriate ANSI Z124 and ASME A112.19.7 standards, and (b) has been manufactured under quality controls deemed appropriate by the manufacturer and periodically reviewed by the certifier.

800.638.8556
HomeInnovation.com

Oasis Lifestyle, LLC
Plymouth, IN
6006

UL LISTED

Home Innovation LAB CERTIFIED™

The manufacturer represents that the product to which this label is affixed (a) duplicates samples independently tested by Home Innovations Research Labs and certified to conform to the requirements of HUD UM Bulletin 73a and the appropriate ANSI Z124 and ICC/ANSI A117.1 standards, and (b) has been manufactured under quality controls deemed appropriate by the manufacturer and periodically reviewed by the certifier.

800.638.8556
HomeInnovation.com

Oasis Lifestyle, LLC
Plymouth, IN
6006

Oasis Lifestyle, LLC - 1400 Pidco Drive - Plymouth, Indiana 46563