LEGACY SERIES
SHOWER STALL

48-INCH MODEL

SH-4834 DS (dual seat)

Rough-In Dimensions	48” wide x 35-1/4” deep x 75-3/4” high (w/ 4-inch dam)
Finished Dimensions	48” wide x 34” deep x 74-1/2” high (w/ 4-inch dam)
Unit Features	● One - Piece Fiberglass Composite Construction ● Sanitary Grade Polyester Gelcoat Surface ● 3-3/8” Dia. Center Drain (see reverse side for location) ● Dual / Contoured Corner Seats ● Elevated Back Wall Shelves ● Flat Wall Design To Accommodate Grab Bar & Seat Applications ● Low Profile Dam (standard) ● Textured Floor Pattern ● Balsa Wood Core Floor Structure

Home Innovation
LAB CERTIFIED™

- Optional ABF Model (provides 3 Inches of drain clearance)
- Factory Applied Reinforcement Packages Available
- Factory Applied Bar Only Package Available

LEGACY SERIES SHOWER STALL

Order No.: SH-4834 DS (4” dam) **SH-4834 DS ABF (6” dam)**

48” x 34”, one-piece gelcoated fiberglass shower stall with a 4” low profile dam (1” drain clearance), dual contoured corner seats, dual upper shelves and lower accessory ledge, wall surround, and center drain.

SH-4834 DS ABF (illustrated)

	Std Unit	ABF Unit
A	75-3/4”	77-3/4”
B	74-1/2”	76-1/2”
C	4”	6”
D	1”	3”
E	-	-
F	-	-

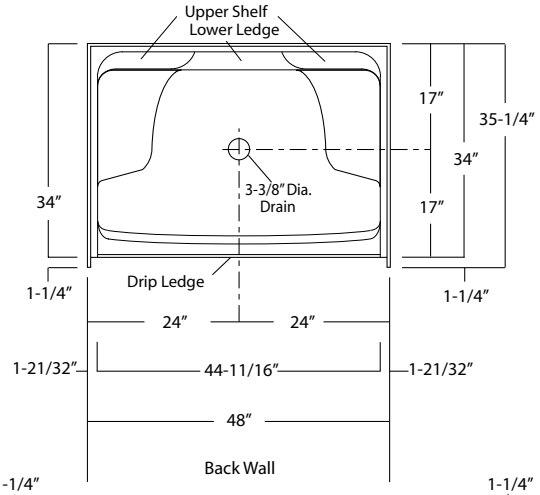

Enclosure Size:
44-11/16”w (max) x 70-1/2”h (max)

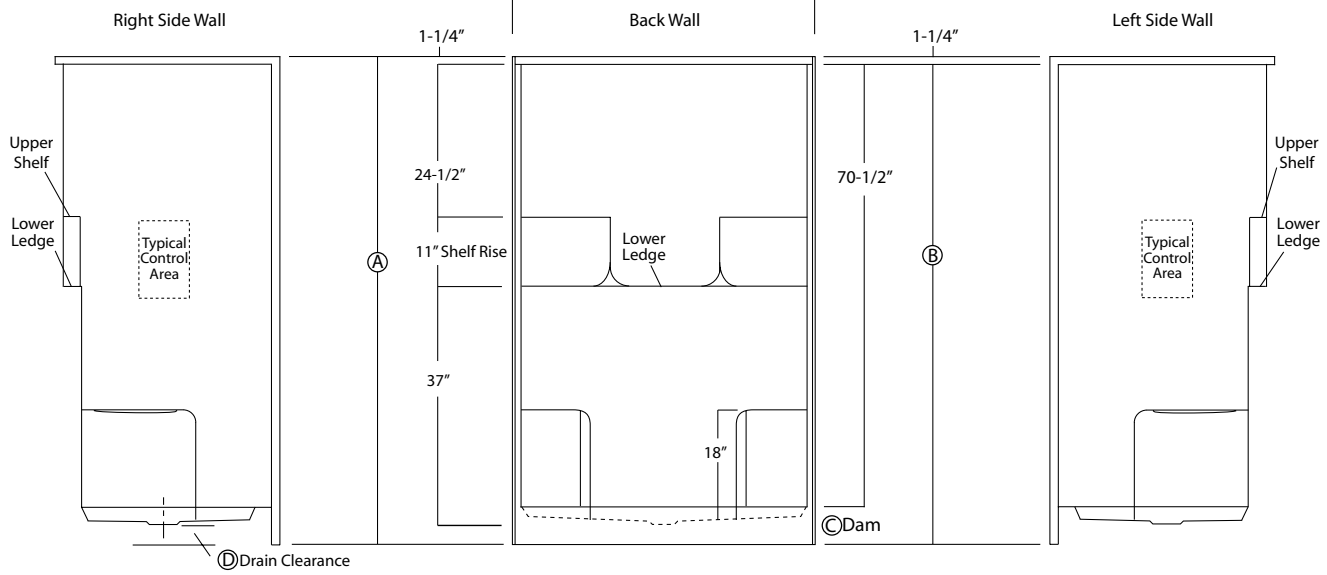

Package Order No.: FH (Fair Housing wall reinforcement)

Package Includes: Factory applied, HUD-FHA compliant (Fair Housing), structurally reinforced wall areas (as shown) for the independent field application of bars.

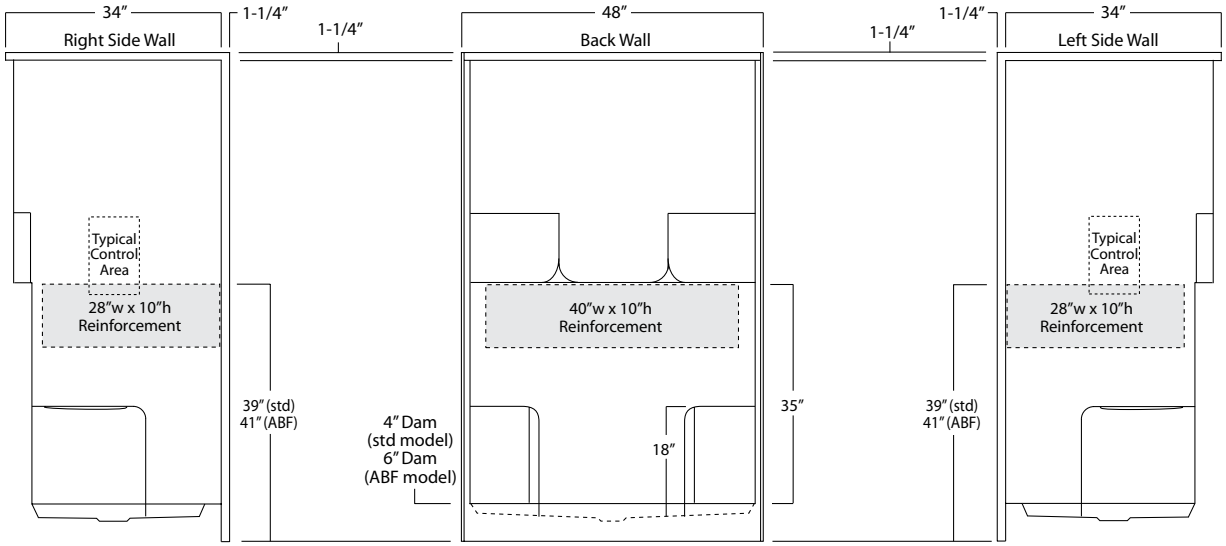

Package Order No.: 3SM (3-side, mid-level wall reinforcement)

Package Includes: Factory applied, 3-side, mid-level, structurally reinforced wall areas (as shown), exceeding ‘Fair Housing’ (HUD/FHA) requirements.
NOTE: Factory installed component packages available with listed reinforcement.

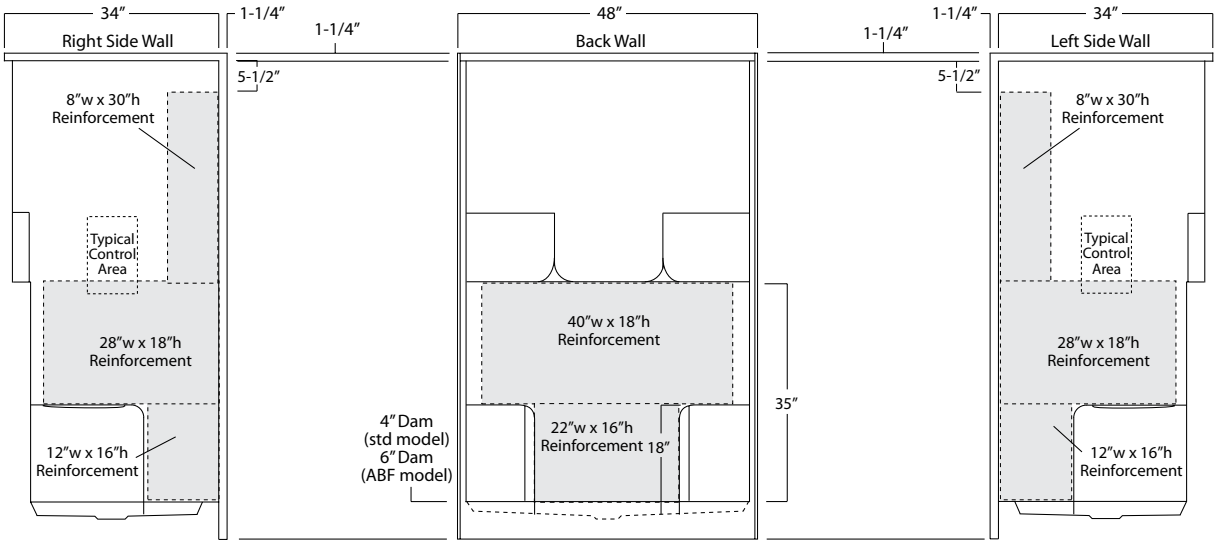

Package Order No.: **3SF (3-side, full-wall reinforcement)**

Package Includes: Factory applied, 3-side, full-wrap, structurally reinforced wall areas (as shown), exceeding 'Fair Housing' (HUD/FHA) requirements, for the independent field application of bars.
NOTE: Factory installed component packages available with listed reinforcement.

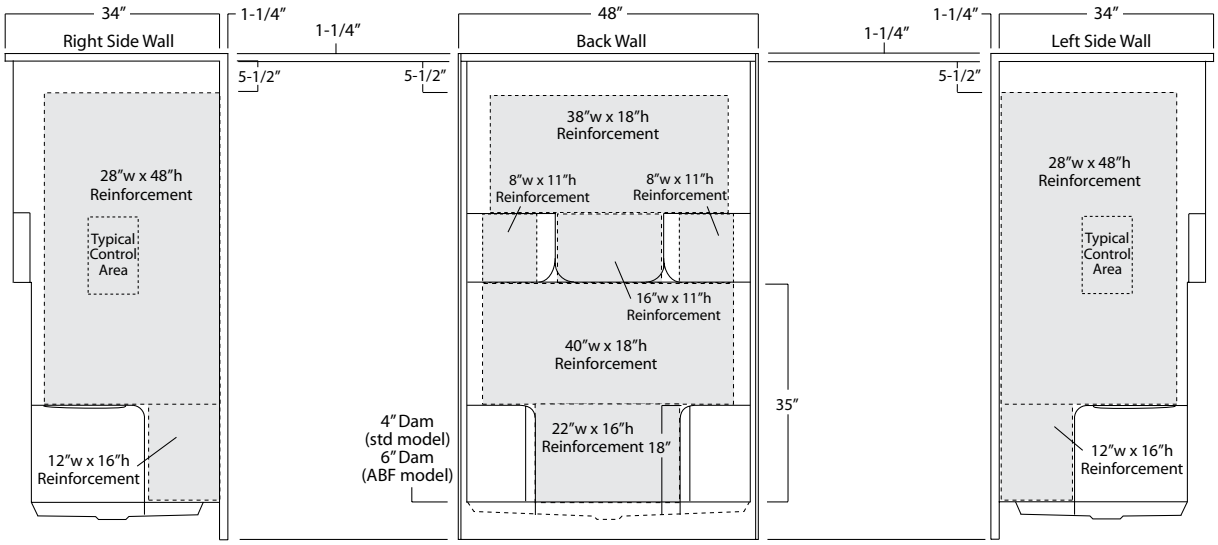

Package Order No.: **BP5-60 (single-bar only package)**
Upgrade Package No.: **BP5-60 WHT (1-1/4" dia., white powder coat, single-bar only package)**

Package Includes: Factory installed, 1-1/2" dia. stainless steel, single, back wall bar package (as shown).

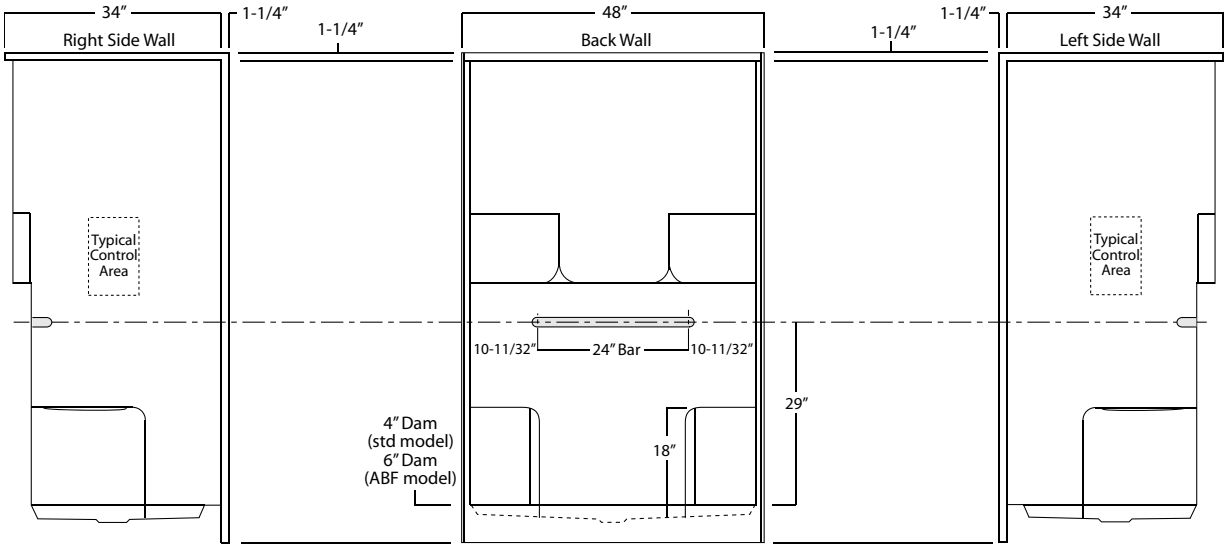

Photographic images may include optional components and appear different than actual product.
Dimensions shown are maximum. Due to the nature of the materials involved, actual unit dimensions can vary (tolerances: +/-1/8 inch)
Oasis reserves the right to modify or discontinue product and/or associated equipment without prior written or verbal notification or obligation.